New Vision
Dedal-NV



DH 3-12x50
Day riflescope

User's Manual

www.dedelnvoptics.com

CAREFULLY
READ THE RULES OF STORAGE,
USING AND ADJUSTMENT OF THE SCOPE
ON THE WEAPON BEFORE IT IS USED!

A failure to comply with the scope instructions manual, adjustment and storage rules may make the manufacturer's guarantee void.

Contents

1. Appearance of the device 3
2. Overview and purpose..... 4
3. Technical specifications 4
4. Reticle type and dimensions 5
    4.1. Reticle description..... 5
    4.2. Determining target distance..... 7
5. Delivery set 10
6. Adaptation to a hunter’s rifle 11
7. Battery setting 11
8. Using the scope..... 11
9. Brightness control for reticle illumination..... 13
10. Integrated electronic control of reticle level 13
11. Scope alignment on a weapon 13
12. Maintenance and storage rules 14
13. Service 14
14. Troubleshooting 14

1. Appearance of the device

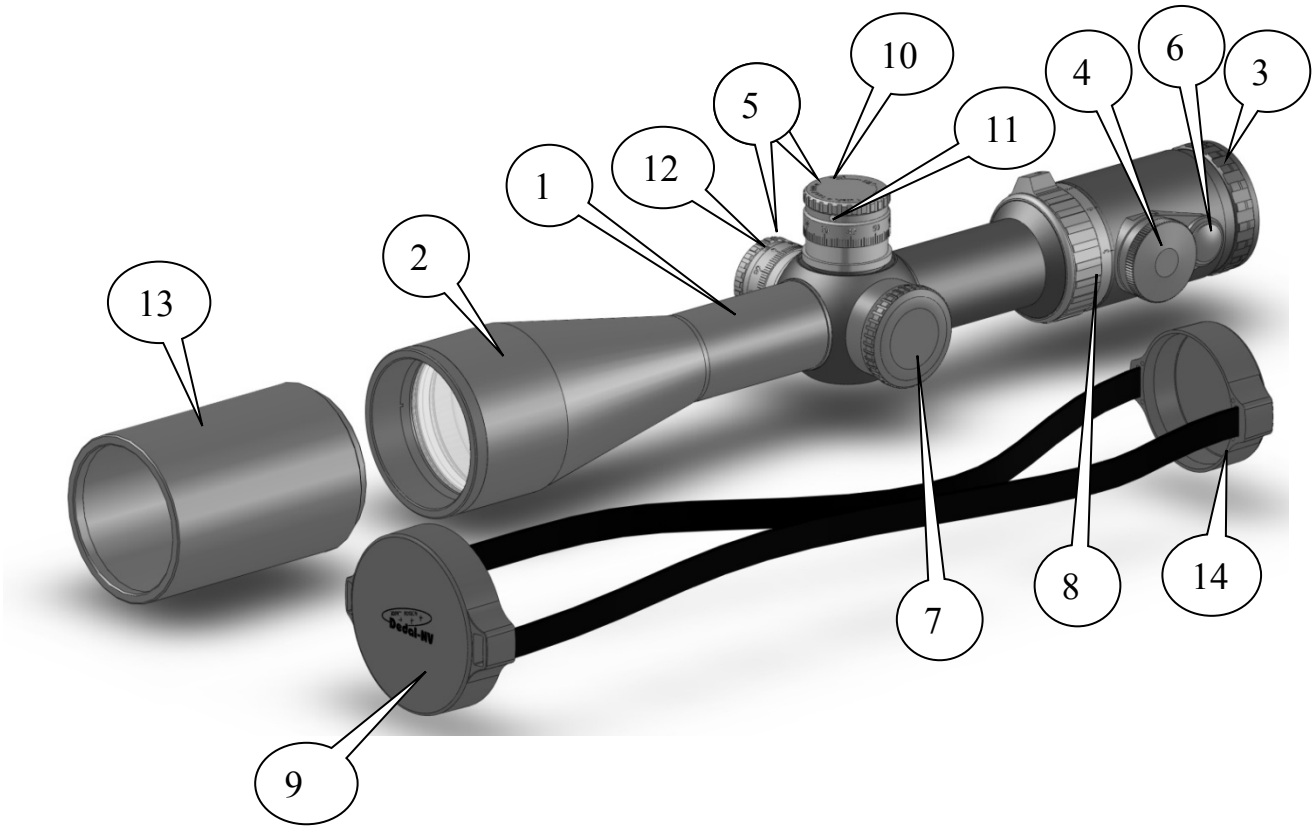

Fig. 1

1 - Body of the device

2 - Objective

3 - Ocular

4 - Battery compartment

5 - Horizontal/vertical reticle adjustment turrets

6 - Aiming reticle brightness button

7 - Parallax setting button

8 - Magnification setting ring

9 - Lens cover

10 - Zero locking screw

11 - Alignment vertical wheel locking screws

12 - Alignment horizontal wheel locking screws

13 - Lens hood

14 - Eyepiece cap

2. Overview and purpose

DH 3-12x50 day riflescope is a scope to be mounted on different hunting weapons for daytime.

The scope reticle is installed in the eyepiece focal plane (2nd focal plane) and therefore the reticle sizes remains unchanged even when the target image is increased. This is convenient when shooting small targets at long distances because the reticle covers just a relatively small part of the target even at large magnifications.

The scope has a central parallax setting system covering the range from 50 m to infinity.

The reticle is illuminating in red, there are seven brightness settings.

The scope has a built-in electronic control of reticle level, enabling high accuracy shooting in a terrain with an obstructed horizon level (mountain hunting).

3. Technical specifications

Tab. 1

		DH 3-12x50
Magnification (variable), x		3x to 12x
Lens diameter, mm		50
Body diameter, mm		30
Field angle, deg.		6.8 to 1.7(11.9 to 3m/100m)
Exit pupil, mm		12.5 to 4.1
Diopter adjustment, D		+3, -3
Click value, mm		10mm/100m
Alignment range, m	Vertically	±1.7/100m
	Horizontally	±0.6/100m
Reticle light battery, V		CR 2032 (3 V)
Battery runtime, hr		15 to 100
Operating temperatures, °C		- 40 to +50
Relative humidity, %		98
Dimensions (without mounts), mm		347x77x77
Weight (without mounts), kg		0.78

P.S.: The scope details may be improved without any preliminary notice.

4. Reticle type and dimensions

4.1. Reticle description

The scope features a black reticle shown on Fig. 2 (lighting available).

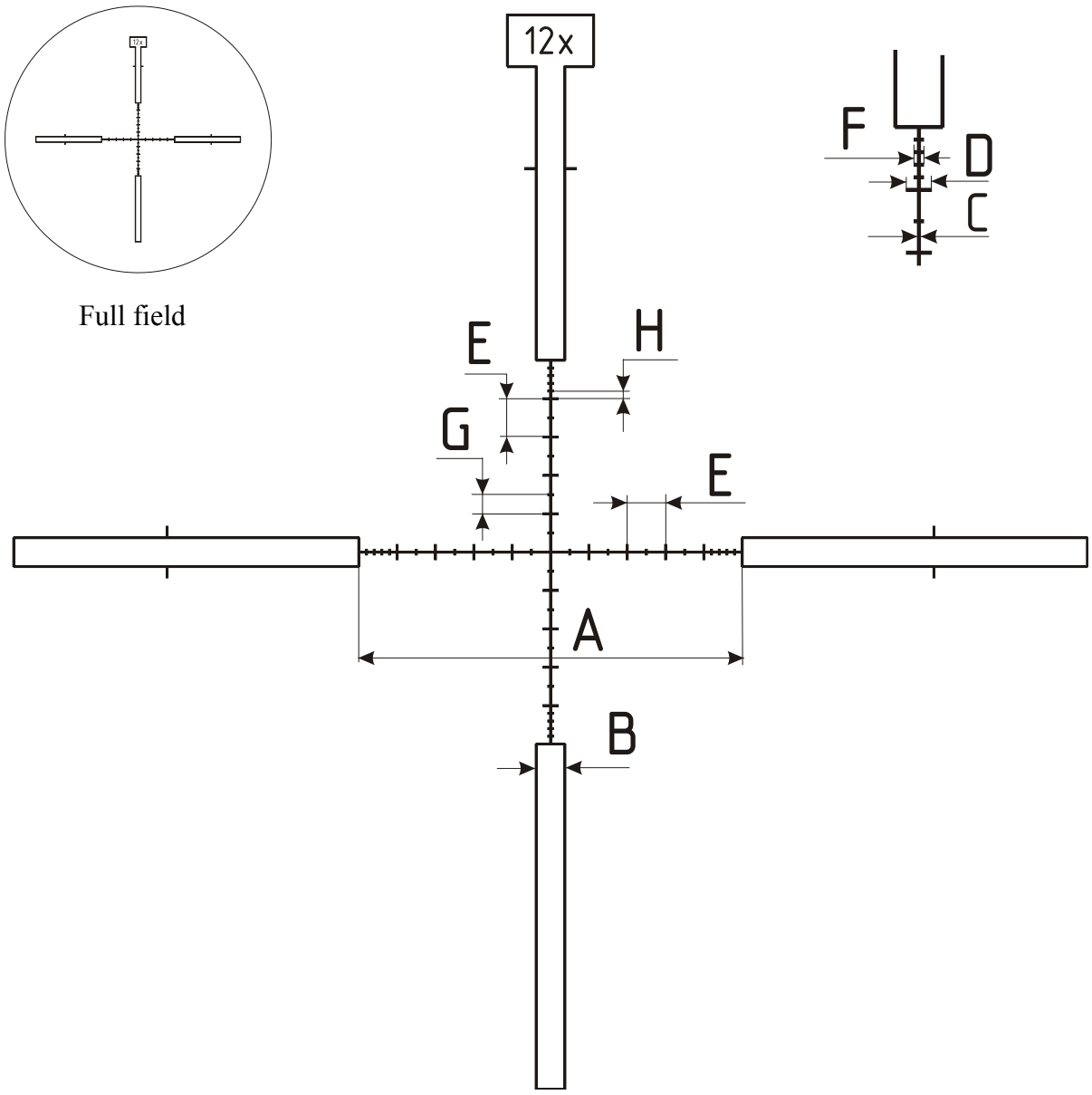

Fig. 2

The central part of the reticle is a Mil Dot reticle featuring some additional vertical and horizontal matchmarks with different intervals thus corresponding to Leupold TMR reticle. The reticle is broken down with smaller intervals at the edges (0.2 thousands of the distance). Such additional details enable a more accurate

measurement of the target distance and consequently improve the shooting accuracy as compared with conventional Mil Dot reticles.

Reticle brightness is adjusted by the button (6). There are seven brightness settings for the reticle. They can be selected by pressing the button (6) consecutively.

The reticle is installed in the 2nd focal plane and therefore its dimensions remain the same at different magnification values. However, they will be changed in regards to the target (subject to magnification).

The reticle dimensions (parameters A, B, C, D, E, F, G and H) can be described in two similar options.

Option 1

The reticle dimensions are given in angular units of measurement, in thousands of the distance (t.d.) or in milliradians (1 mil).

NOTE

1 mil is an angular unit of measurement equal to:

1 mil = 3.438 x MOA (MOA = minute of angle),

= 1 t.d. (thousands of the distance),

= 10 cm per 100 meters of the distance.

On Fig. 2, E = 1 mil (= 1 t.d.) means the distance between the large matchmarks. All reticle values are shown in Table 2.

Table 2

	A	B	C	D	E	F	G	H
Size, mil (or t.d.)	10	0.75	0.05	0.4	1.0	0.15	0.5	0.2

Option 2

The reticle dimensions are given in centimeters per 100 m of the distance for scope magnification equal to 12x.

For 12x magnification in metric units the "E" (Fig. 2) which means the distance between large matchmarks, is E = 10 cm per 100 of the distance.

All reticle dimensions for the 12x magnification at 100 m distance are shown in Table 3.

Table 3

	A	B	C	D	E	F	G	H
Size, cm/100m distance	100	7.5	0.5	4.0	10	1.5	5	2

For other magnifications the reticle dimensions per 100 m of the distance are given in Table 4 (all sizes are given in cm/ 100 m).

Table 4

Magnification, x	A	B	C	D	E
3	400	30.0	2.0	16.0	40.0
4	300	22.5	1.5	12.0	30.0
6	200	15.0	1.00	8.00	20.0
8	150	11.25	0.75	6.0	15.0
10	120	9.0	0.60	4.8	12.0
12	100	7.5	0.50	4.0	10.0

Reticle sizes at different magnifications can be calculated as follows:

$$\text{Reticle size @ 100 m} = \frac{[\text{Given size @ 12-x}] \times 12}{\text{V magnification}}$$

(with x = V)

Example: calculate the step (E) at the thin crosshair for a 100 m distance with 8x magnification.
The step value for 100 m distance with 12x magnification is 10 cm. Now let us see how it goes with the 8x magnification at the same distance:
E= (10 x 12) : 8 = 15 cm for 100 m.

The distance to the target also will have influence upon the relevant reticle size.

Reticle size = (calculated reticle size for 100 m) x K,
(at different distances),

where K means range correction factor equal to:
= 0.5 – for 50 m distance,
= 1.0 – for 100 m distance,
= 2.0 – for 200 m distance,
= 3.0 – for 300 m distance, etc.

Example: calculate the step at the thin crosshair for a 300 m distance with 8x magnification. Value of division E = 15 cm x 3 = 45 cm.

4.2. Determining target distance (only for 12x magnification)

4.2.1. To evaluate the distance you can use relevant horizontal matchmarks in the bottom of the reticle

Select magnification 12x.

If the target height is 1 m and if it fits just between the horizontal matchmarks above number 2, then the distance to that target is 200 m. If the object fits between the matchmarks above number 4, then the distance to that target is 400 m, etc. (see Fig. 2).

4.2.2. If you use Mil Dot reticle and you know the size of the target, you can calculate the distance to that target or correct lateral drift of the bullet (due to wind conditions)

For that:
1) Set magnification 12x.
2) Evaluate the actual vertical size of the target to be calculated.
3) Move the crosshair so that one side of the target above the horizontal line could match a Mil Dot matchmark (see Fig. 3).
4) Calculate the height of the target using the number of points (mils) along the target height (the more exactly you calculate the target dimensions, the more accurate range you will get – this is especially important for small targets or distanced targets which are farther than 450 m).
5) The distance can be calculated as follows:

$$L = (H \times 1000) / h,$$

Where:
L, means distance to the target, m,
H, means the actual height of the target, m,
h , means the height of the target as per the reticle, mil.

On Fig. 3 you can see an example of such evaluation: distance to a 1.5 m wild boar as per Mil Dot reticle.

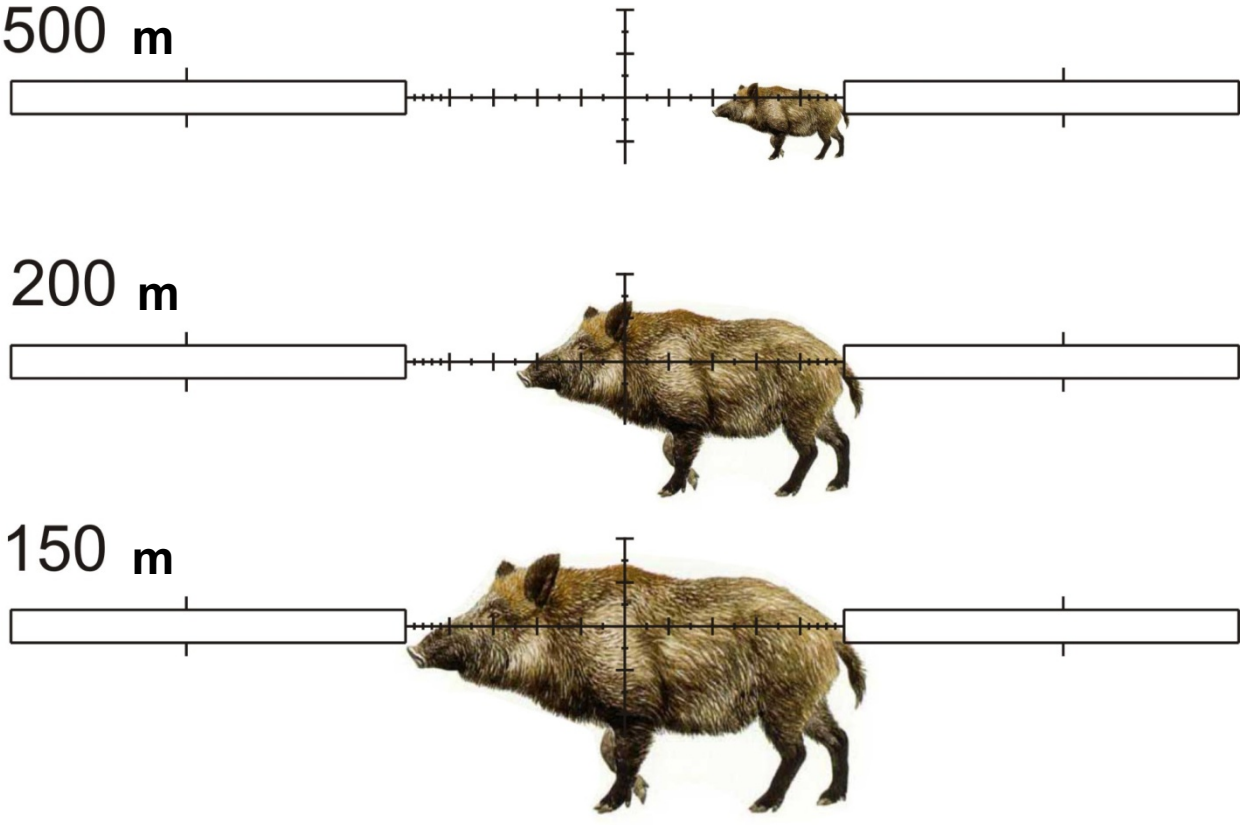

Fig. 3.

Also, you can use reference Table 5 and Table 6 to calculate the distance to the target with dimensions from 30 cm to 2 m.

Table 5

Distance to target, m							
	Actual length (height) of the target, m						
Target dimensions as per the reticle, (mil) or (t.d.)	30	40	50	60	70	80	90
1.00 mil	300	400	500	600	700	800	900
1.25 mil	240	320	400	480	560	640	720
1.50 mil	200	267	333	400	467	533	600
1.75 mil	171	229	286	343	400	457	514
2.0 mil	150	200	250	300	350	400	450
2.5 mil	120	160	200	240	280	320	360
3.0 mil	100	133	167	200	233	267	300
3.5 mil	86	114	143	171	200	229	257
4.0 mil	75	100	125	150	175	200	225
4.5 mil	67	89	111	133	156	178	200
5.0 mil	60	80	100	120	140	160	180
5.5 mil	55	73	91	109	127	145	164
6.0 mil	50	67	83	100	117	133	150
6.5 mil	46	62	77	92	108	123	138
7.0 mil	43	57	71	86	100	114	129
7.5 mil	40	53	67	80	93	107	120
8.0 mil	38	50	63	75	88	100	113
8.5 mil	35	47	59	71	82	94	106
9.0 mil	33	44	56	67	78	89	100
9.5 mil	32	42	53	63	74	84	95
10.0 mil	30	40	50	60	70	80	90

Table 6

Distance to target, m					
	Actual length (or height) of the target, m				
Number of divisions as per the reticle, (mil) or (t.d.)	1.00	1.25	1.50 (wild boar)	1.75	2.00
2.0	500	625	750	875	1000
2.5	400	500	600	700	800
3.0	333	417	500 (*)	583	667
3.5	286	357	429	500	571
4.0	250	313	375	438	500
4.5	222	278	333	389	444
5.0	200	250	300	350	400
5.5	182	227	273	318	364
6.0	167	208	250	292	333
6.5	154	192	231	269	308
7.0	143	179	214	250	286
7.5	133	167	200 (*)	233	267
8.0	125	156	188	219	250
8.5	118	147	176	206	235
9.0	111	139	167	194	222
9.5	105	132	158	184	211
10.0	100	125	150 (*)	175	200

(*) – see relevant data on Fig. 3.

5. Delivery set

DH 3-12x50 day riflescope includes the following items and accessories in supply:

- DH 3-12x50 day riflescope	1 pcs.
- Objective cover	1 pcs.
- Eyepiece cover	1 pcs.
- Hexagonal wrench for reticle displacement turrets setting (S2)	1 pcs.
- Lens-Cleaning cloth	1 pcs.
- CR 2032 battery	1 pcs.
- Protective cover	1 pcs.
- User`s manual	1 pcs.
- Warranty card	1 pcs.

Additional delivery set:

- Lens hood SHD-50	1 pcs.
- Mount	1 pcs.

6. Adaptation to a hunter's rifle

To adjust the scope on the weapon retaining rings should be installed and glued (Ø 30 mm) in accordance with mounting manufacturer's guidelines.

The Ø 30 mm retaining rings shall be glued to the scope body by means of two-component epoxy glue.

IMPORTANT
Do not wind the retaining ring screws too tightly. This may deform the body and impact the parallax setting mechanism.
When the screws are wound too tightly, the parallax setting ring rotation will require much more efforts. In this case slacken the retaining rings screws until the normal rotation of the parallax setting wheel is restored.

Scope DH 3-12x50 can be supplied adapted for a specific weapon model as well as without retaining rings installed on the body. Adjustment of the scope is specified in its guarantee card.

For individual adjustment on your own contact the manufacturer for instructions.

7. Battery setting

The illumination of DH 3-12x50 reticle is powered from a CR2032 battery. Make sure it is in a good condition and its "negative" end is put inside the battery compartment.

When the light is on and the reticle flickers several times, replace the battery.

To replace the battery open the battery compartment cover (4) and replace the old battery with a new one. Mind battery polarity.

8. Using the scope

Operation procedure

1) Install and fix the scope on its seat on the weapon in accordance with the fixing instruction.
2) Install the battery acc. to Section 7.
3) Open the caps of the lens (9) and the eyepiece (14).
4) Rotate the eyepiece (3) and make sure that the reticle looks as sharp as possible.
5) Check the parallax setting. To do that select a target point and move your eye around the eyepiece. When you see that the target point is displaced from the monitored object, rotate the wheel (7) and check it again. The parallax setting is deemed finished when the center of the reticle is not displaced from the monitored object, when you move your eye.
6) Select a required magnification with the ring (8).

7) When required, push the knob and turn the illumination (6) on.
The scope is now ready to use.

RECOMMENDATION
To mitigate the lateral light exposure and to increase the image sharpness install a hood SHD-50 on the scope (13).

After using

1) Turn the reticle illumination off by pressing the button (6) within at least 2 seconds.
2) Close the caps of the lens (9) and the eyepiece (14) after you are through with the scope.
3) Remove the scope from the weapon if you plan to keep it in travel mode.

9. Brightness control for reticle illumination

The scope features a digital system for reticle brightness adjustment. After a short-time pressing onto the button (6) the reticle light will be turned on in the mode, which was selected in the previous session.

To adjust the reticle brightness briefly push the button (6) and select one of seven brightness modes. When the battery is low, the reticle will flicker while turning on. It means you should replace the battery.

The reticle highlight will be automatically turned off in 30 minutes since the last pressing of the knob (6). Before turning off the reticle light will flicker for a number of seconds. Also, you can turn the reticle light on your own by pressing the button (6) and keeping it pressed for at least 2 seconds.

10. Integrated electronic control of reticle level

To turn the electronic control of reticle level (ECRL) on press the button (6) and keep it pressed at least 5 sec. The reticle will flash twice confirming that the ECRL is on. When the weapon slopes aside within 0 to 1 deg., the reticle will glint. When the slope is more than 3 deg., the reticle will flash. To stop the flashering restore the horizontal position of the reticle.

To turn the ECRL off press the button and keep it pressed at least for 2 seconds. Also, it will be automatically turned off in 30 minutes.

NOTE
As a rule the zero level is fixed at the enterprise if the rifle scope is supplied with the mount for weapon. But you can execute the calibration yourself. Place the rifle scope on the horizontal surface and keep the bottom (6) more than 12 seconds. The new zero position will be saved in the rifle scope's settings.

11. Scope alignment on a weapon

The scope has a mechanism to move the aiming mark. The mechanism screws have wheels (5) on with horizontal and vertical scales where you can see the number of wheel rotations and clicks.

To align the scope

1) Install the scope on the seating weaver on the weapon.
2) Install the target board or select an aiming point.
3) Fix the weapon on the aim machine tool.
4-5) Aim the weapon as per its mechanical sight (front and back) to the aiming point (if available). At this stage you may use laser boresighting (LBS not included into the standard scope of supply).
6) Rotate the reticle wheels (5) and make sure that the crosshair is superimposed on the aiming point selected as per the mechanical sight or LBS.
7) Dismount the weapon from the aim machine tool and remove the boresighting laser.
8) Make 3–4 single shots thoroughly targeting to the aiming point.
9) Determine shooting accuracy and the mean point of impact (MPI) in accordance with firing regulations (the accuracy shall be deemed acceptable if it is not worse than the same without any scope).
10) Make due MPI corrections if required to do so in accordance with the images on the wheels.

NOTE

The value of the biasing mechanism click is shown on the alignment wheels and makes up 10 mm per each 100 m of the distance.

11) Make a practice shot and make sure that the aiming point coincides with bullet impact point (when required, make corrections once again).
12) After the alignment the wheels positions (5) shall be fixed (zeroed in). For that use the hexagonal wrench (S2) and slacken the three wheel fixation screws (11) as shown on Fig. 4. Rotate the wheels (without clicks) until the "0" mark coincides with the matchmark on the scope body. After that take the same wrench and tighten the three fixation wheels to fix the new wheels position (11).

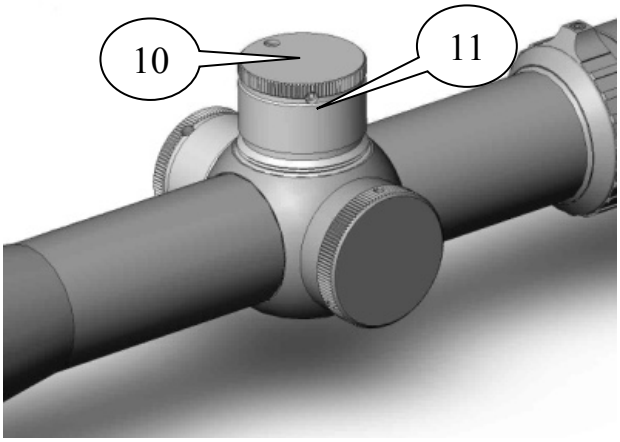

Fig. 4.

The correction mechanism has a limit stop system enabling minus 2 or minus 4 clicks from the 0 position. If the rotation mechanism is not fixed by the stop limit, then activate that limit stop by 4–5 clockwise rotations of the screw (10). If the screw rotates too smoothly lock it with a locking compound or paint.

RECOMMENDATION

When it is intended to use 1–3 clicks for correction, we recommend doing 2–4 clicks more and then return back to the required position of the correction wheel.

12. Transportation and storage

The scope shall be transported and stored in a special case. The scope in this case can be transported by any means of transportation (including aircraft – in a sealed compartment) without distance limits.

While stored keep the scope protected from impacts and direct sun exposure, from ingress of water and dust onto the optic parts.

The device can be stored in a non-heated storage. The maximum storage temperature is 60° C.

13. Service

The scope service includes a visual inspection of the scope and its components.

The scope shall look like it is described in the technical documentation. On the scope outer surfaces there shall be no scratches, indentations, coating defects and corrosion. The fixation details shall ensure a firm fixation of the scope parts. Spinning or unscrewing by yourself of the scope parts is not allowed during its operation. The movable parts of the scope shall move smoothly, without sticking, skipping and slacking.

During routine maintenance it is recommended to wipe the optical parts of the scope with napkins included into the delivery set.

14. Troubleshooting

Focusing not available

Rotate the eyepiece as described in Section 8 herein. If no focusing has been achieved wipe the optical parts with a napkins.

Reticle lighting does not work

Check the battery condition and make sure it is installed properly.

Condensate on the scope

In a cold season to avoid weeping on the eyepiece lens, use special protective coatings (like those for eyeglasses).

MPI runs away

Check if the scope is fixed on correctly. Make sure that the scope is thoroughly glued in the retaining rings and mounted on your weapon securely and without slacks.

JSC DEDAL-NV_

Actual Address: 18, Stromynka Str, Moscow, 107076, Russia.
Mail address: P/b 109, 107014, Moscow, Russia
Phone/fax: +7 (495) 617-05-96 /97 **e-mail:** info@dedalnvoptics.com
Phone/fax: +7 (495) 961-27-49 http://www.dedalnvoptics.com