New Vision
Dedal-NV



Dedal-450
The night vision rifle scope

OPERATION MANUAL

www.dedalnvoptics.com

Features

- *4x magnification*
- *Gen. II+, III image intensifier*
- *Shockproof even with heavy recoil (cal. .375 H&H, .416Rigby)*
- *Centre Mil-Dot type reticle with luminous central point*
- *High quality of the image*
- *Special high light transmission optics*
- *Internal focusing of the objective. image focusing from 10 m to infinity*
- *Protection of the device against excess of general level of light exposure*
- *Automatic brightness control*
- *Low battery indicator*
- *Built-in high-power (75 mW), safety, angle adjustable IR illuminator*
- *Possibility of adaptation to different types of hunting and official rifles*
- *Waterproof*
- *Low power consumption*
- *Light weight*

Please carefully read rules of storage, utilization and adaptation of the device to a rifle before its activation!

Infringement of rules of storage, adaptation and utilization of the device clarified in the operation manual may be a reason for cancellation of the warranty obligations of the manufacturer.

Contents

Features	**1**
Appearance of the device	**3**
Overview	**4**
Specifications	**4**
Components	**6**
Installation of batteries	**6**
Function test in a daytime	**7**
Use of the device during dark time	**7**
Adaptation to a hunter's rifle	**8**
Type and dimensions of the reticle	**9**
Adjustment of the scope on the rifle	**9**
Maintenance and storage rules	**11**
Troubleshooting	**11**

Appearance of the device

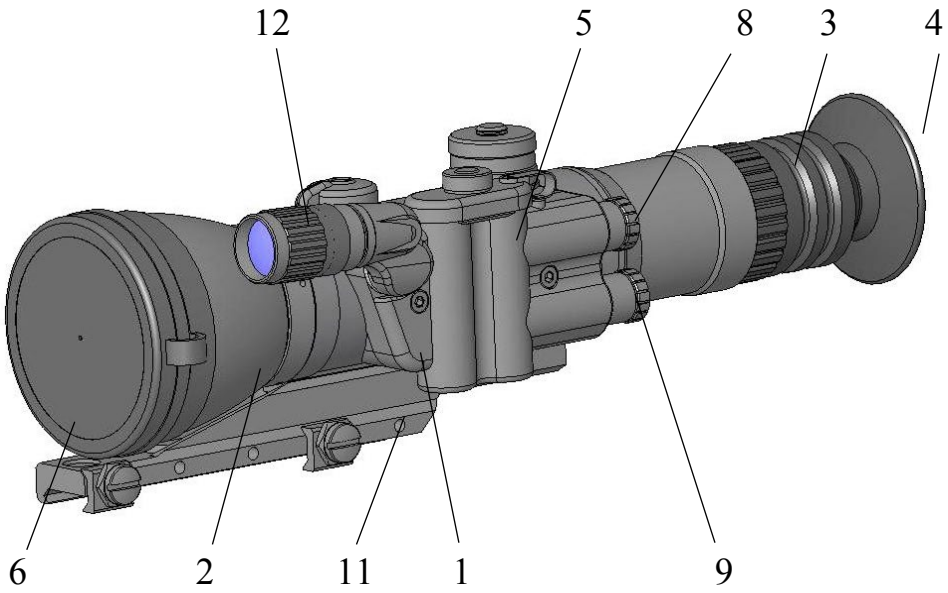

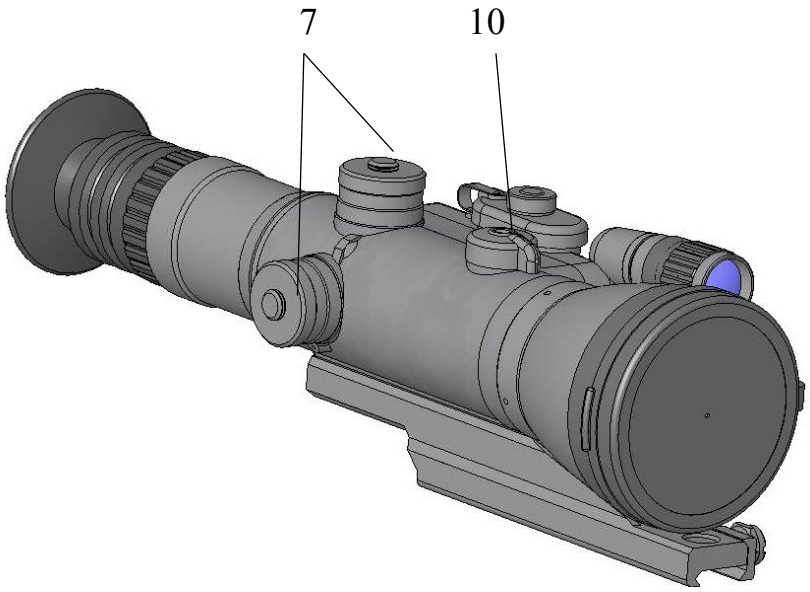

1 – Body of the device
2 – Objective
3 – Eyepiece
4 – Rubber eye-cup
5 – Battery compartment
6 – Objective's cover
7 – Windage/elevation adjustment mechanism
8 – On/Off/power alteration switch of the device and of the IR illuminator
9 – Adjustment switch of brightness of the centre of the reticle
10 – Objective focusing handle
11 – Rifle mount
12 – Built-in IR illuminator 75mW

Overview

Your Dedal-450 Night Vision Scope is a modern, universal night vision device designed for a wide range of activities from professional to amateur activity:

- Night observation and hunting,
- Patrolling and safeguarding,
- Rescuing and searching works,
- Law/police enforcement.

The device is equipped with high quality image intensifier tube Gen. II+, III employing the principle of multiple intensification of the image brightness in the visible and IR radiation which guarantees great observation range.

Note.
Observation and identification range provided by the device depends on the value natural night light, type of the objective used, transparency of the atmosphere and contrast between the target and background. The identification range increases in the conditions of good lightning, at moony night given outside illumination if the target is situated on the light background (sand, snow). The identification range decreases in the conditions of weak lightning, low transparency of the atmosphere if the target is situated on the dark background (plough-land, stems of trees, etc.).

Specifications

	«Dedal-450-A» **«Dedal-450-C»**	**«Dedal-450-DK2»** **«Dedal-450-DK3»**
General		
Magnification, x	4.0	4.4
Objective	100mmF/1.5	110mmF/1.6
Field of view, degree	8	
Focus range, m	10 to infinity	
Diopter setting, D	-4, +4	
Eye relief distance, mm	60	
IR illuminator	IR light diode (75 mW, 805 nm)	
Voltage, V	3	
Power source	Battery of the type AA - 2 pc.	
Battery life, h - in a passive mode - in an active mode	 min. 60 min.5 (with IR illuminator)	
Overall dimensions, mm	310x115x75	
Weight (without mount), kg	0.96	
Conditions of work		
Range of working temperatures	from -40 ºC up to +50 ºC	
Relative humidity	up to 98%	
Image intensifier tube		

	Tube type (photocathode sensitivity (μA/Lm), resolution (lp/mm), hole pitch of MCP (μm))
mod. «Dedal-450-A»	Gen.II+ (min.350, min.45, 12.1)
mod. «Dedal-450-C»	Gen.II+ (min.540, min.57,-)
mod. «Dedal-450-DK2»	Gen.III (min.1800, min.57,-)
mod. «Dedal-450-DK3»	Gen.III (min.1800, min.64,-)

P.S.
1. The screen may have separate black dots or small groups of dots allowed by the technology of tubes' production at the manufacturing plants.
2. Technical characteristics of the device can be improved without preliminary notice.
3. The logo may be changed from Dedal-450 to D-450 without preliminary notice.

Components

Standard Delivery Set:

- Dedal-450 Night Vision Riflescope - 1 pc.
  (with Objective Cap, Eyepiece Rubber and IR Illuminator)
- Cleaning Cloth - 1 pc.
- Allen Wrench for setting the Windage/Elevation Adjustment Knobs to zero position (S1.5) - 1 pc.
- Operation Manual - 1 pc.
- Warranty Card - 1 pc.
- Soft Bag - 1 pc.

Optional Accessories:
(not included into the standard delivery set)

- Standard Prism Mount (SP480);
- 7/8" Weaver Rail Mount (WP480-01);
- Side Mount (SM450) for rifles similar to the "Tiger" type;
- Mounts produced by MAK company;
- Mounts produced by EAW (Apel) company;
- Two AA Batteries

Installation of batteries

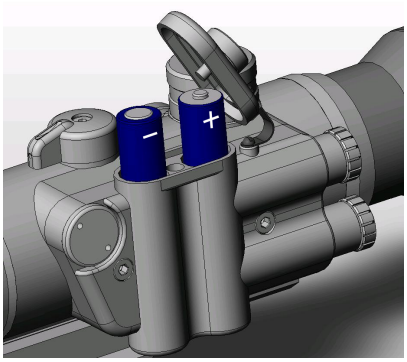

Your device Dedal-450 works from two batteries of AA type. Be sure that the batteries are in good condition and they are installed in accordance to the picture on the battery compartment.
In order to replace batteries it is necessary to turn off a cover of the battery compartment and replace old batteries with new ones, keeping polarity of the batteries.

Note.
The light intensity of the center of the reticle could be used as low battery indicator. With IR illuminator switched on with full power and during reduction of the electric potential under 1.9 V the brightness of the reticle decrease as compared to the normal rate. If the electric potential continue to decrease the reticle stop shine and the batteries must be changed to a new ones.

Note.
In order to ensure the longest operation time of the device and full power of the IR illuminator (using one set of batteries) it is recommended to use batteries of Alkaline system, possessing the most stable characteristics of a current consumption when their power capacity is reduced.

Function test in a daytime

In order to test operation of the device you can turn it on with the closed objective cover in a daytime. Objective cover of has a small hole enough to test the operating condition of the device. When the device is turned on the observed picture appears on the screen in a yellow-green color.

Note.
The device won't burn out even if you open the cover of the objective. When the light is excessively bright protection will be activated (automatic adjustment of brightness) and the image will curtail. When the device is placed into a dark place the image will be restored in several seconds.

Caution.
The device is not supposed to be directed to the bright sources of light: bright lamps, the sun, welding and etc – it may result in the reduction of the coefficient of brightness magnification of the device. In order to avoid the fatigue of photo-cathode it is not allowed to leave the device motionless in a turned on condition in the excessively bright environment (in the morning, in the evening, in a daytime) for more than 30 minutes.

Use of the device in a dark time

1. Take off (open) the cover of the objective.
2. Turn on the device - position ON of the switch (8). Green light should appear on the screen (the device works in a passive mode).
3. Turning the eyepiece (3), reach the sharpest image of the reticle. The brightness of the reticle can be adjusted by the switch (9).
4. Choose the object of observation and focus the objective of the device with the handle (10) till the receipt of maximally clear, distinct and sharp image of the observed object.
5. When illumination of the observed object is required, turn on (8) IR illuminator (active mode). You can select one of the three positions changing the illuminator's power (10, 25 or 75 mW). The direction of glow of IR illuminator could be adjusted by moving body of the illuminator in vertical direction. In addition, with the help of rolling IR lens, the glow could be adjusted in full-circle, which allows to move IR plash directly to the centre of the screen.
6. Having finished the work, turn the ON / OFF switch (8) to the position OFF.
7. Close the cover of the objective after you have finished the work the device.

Recommendation.
When the device is stored for a long time it is recommended not to leave batteries in the compartment of the device in order to avoid leakage of the batteries.

Do not forget to turn off the device after use!

Adaptation to a hunter's rifle

Your night vision device Dedal-450 can be used as hunter's night vision riflescope.

Recommendation.
We recommend you to specify the order of usage of the hunter's scope on your rifle with the local competent authorities.

Your night vision device Dedal-450 can be used with different types of mounts, providing reliable fixation of the device on the particular rifles. Manufacturers of civil rifles do not possess uniform standards for a mounting place of optical devices, and as a result universal fastening device is not available. The device Dedal-450 is supplied with a fastening mount without hard fastening to the body, in most cases allowing the performance of special adaptation of the device for a particular model of rifles. For this purpose you should address to a specialized rifle workshop or implement the fastening yourself, if you possess enough qualification, following ***"The rules of adaptation of "Dedal" night vision riflescopes".***

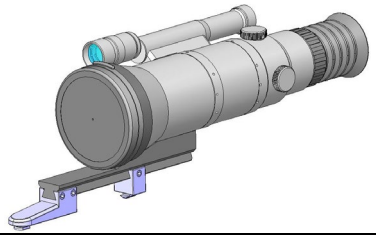	EAW (Apel) mount.

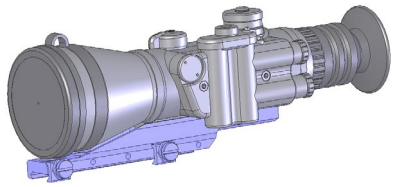	Weaver rail mount.
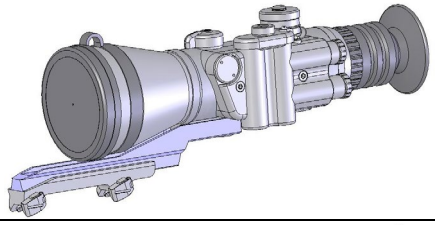	Blaser mount.
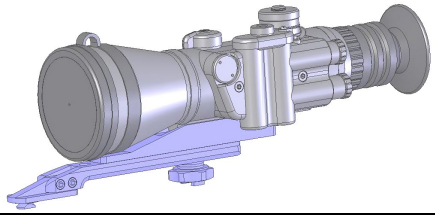	MAK mount
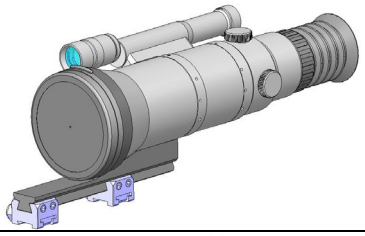	11 mm prism mount
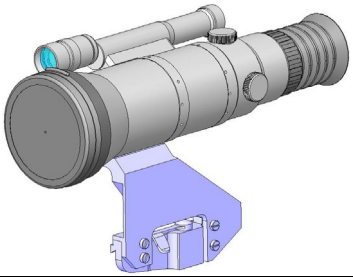	Side “Tiger” mount

Caution.

In case of using another variant of adaptation or alternative type of mount, please coordinate it with JSC Dedal-NV. Most cases of uncontrolled displacement of mean point of impact are concerned with incorrect adaptation.

Type and dimensions of the reticle

The reticle is Mil-Dot type.

The central part of the reticle is shown at the picture. The brightness of the central point of the reticle can be adjusted with the toggle switch (9). The magnitude of displacement of the

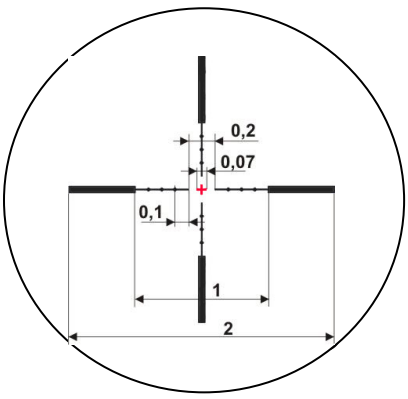

reticle by turning for one click at the distance 100m is 15mm (½ MOA). The dimensions are indicated in meters at 100m distance.

Adjustment of the scope on the rifle

Before the adjustment of the scope its objective should be adjusted for a distant object (select infinity) in a dark time with the opened cover of the objective.
Adjustment of the scope can be performed in a daytime with the closed cover of the objective or in the twilight on the adjusted target or on the remote point.
Adjustment of the scope is performed in the following way:



– fix the scope on the fit of the rifle;
– set a panel with a target or select the point of aiming;
– set the rifle on the scoped machine;
– direct the rifle to the point of aiming by mechanical sight (bead with a slot) (if it is possible). At this stage it is suitable to apply laser of cold test shooting inserted in the barrel of the rifle, which indicates geometrical point of the barrel position. Such lasers are supplied by the JSC Dedal-NV;
– unscrew the protective caps of the bias screws of the aimed graticule. Turning the bias screws of the reticle obtain the matching of reticle crosshairs with the aimed point, set by the mechanical sight or cold test shooting
– remove the rifle from scoped machine and take out cold test shooting;
– make 2-3 shots. Having examined the target make necessary corrections (for example, in order to move the hit point downwards and leftwards, screws of the mechanism should be turned clockwise, in the directions Down and Left correspondingly. The aiming point is moving upwards and rightwards);
– make a control shot and find out whether the aiming point coincides with the bullet hit point. (Make the correction again if necessary);
– the shoot in position of windage/elevation mechanism could be set in a zero position. For that end you should unscrew three screws of the knob with allen key (not included in the standard set) and turn the knob until the zero position of the knob coincide with special mark on the body of the scope. Use the same key to fix the elevation knob with three screws.
– fix the protective caps
– the device is ready for operation;

Note.
In view of speciality of manufacturing technique and design of vacuum technique, it is not always possible to eliminate all hidden defects, which could appear during impulse load when shooting. It is recommended to make 10-15 shots during adjustment fire to make additional control before real operation.

When mean point of impact is below:	
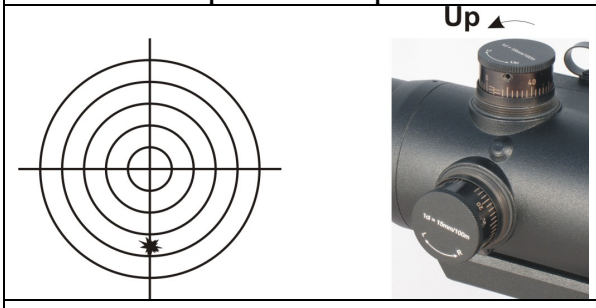	Turn the knob at the up direction (contraclockwise)
When mean point of impact is above:	
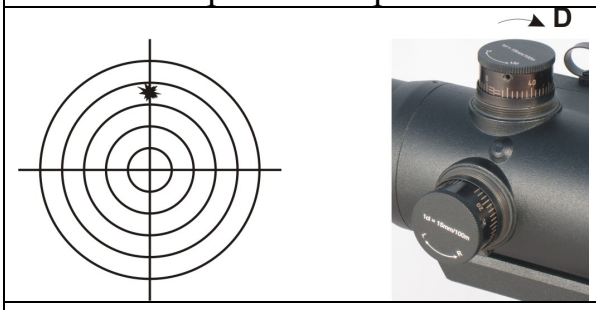	Turn the knob at the down direction (clockwise)
When mean point of impact is in the left:	
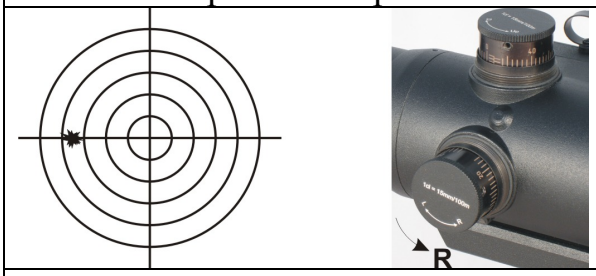	Turn the knob at the right direction (contraclockwise)
When mean point of impact is in the right:	
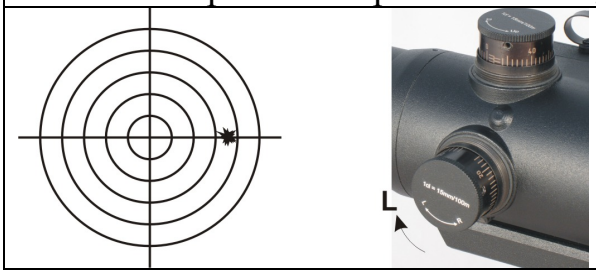	Turn the knob at the left direction (clockwise)

Maintenance and Storage Rules

Device maintenance and storage rules are very simple.
Keep and carry the device in a closed box with a cover put on the objective.
Protect the device from hits and direct influence of rain, snow and dust on the optical parts.

Protect the box from moisture penetration and the device should be protected from direct sun influence. The device should be kept in a warm, dry place far from heating devices, batteries should be taken out. Storage temperature must not exceed 60°C.

Troubleshooting

The device Dedal-450 does not work...

Make sure that the batteries have been installed and they are in good condition.

Dedal-450 can not be focused...

Adjust the objective lens and eyepiece according to the instructions specified in the Operation section. If the device is not still focusing wipe and clean the optical parts.

The image has faded or disappeared completely…

Bright source of light can be a reason of the image reduction, loss of resolution or complete disappearance. This is an automatic protection system of the device. If Dedal-450 has been switched off automatically, turn the switch to the position OFF. The unit will be ready for use in one-two seconds.

Condensation effect…

In order to avoid misting of the eyepiece lens in cold time use special anti-damping covers (for example, for a spectacles).

Some black dots are on the screen…

The image may contain small black dots or groups of black dots. Most of black dots can be seen only in daytime and in the operation mode the dots become almost invisible.

Bright points are on the screen…

The image may contain some bright points caused by gradual relief of static electricity from the cathode. This feature may appear immediately after the assembly of the device and removal/setting of the objective from/to the device, and it always disappears in 5-14 days of the device utilization (storage).

DEDAL-NV
Russia, 107076,
18 Stromynka St., Moscow
Tel: +7(495) 617-0596, +7(495) 617-0597
Fax: +7(495) 961-2749

http://www.dedalnvoptics.com
e-mail: info@dedalnvoptics.com